REV	DATE	DESCRIPTION	DESIGNED	CHECK	APPROVED

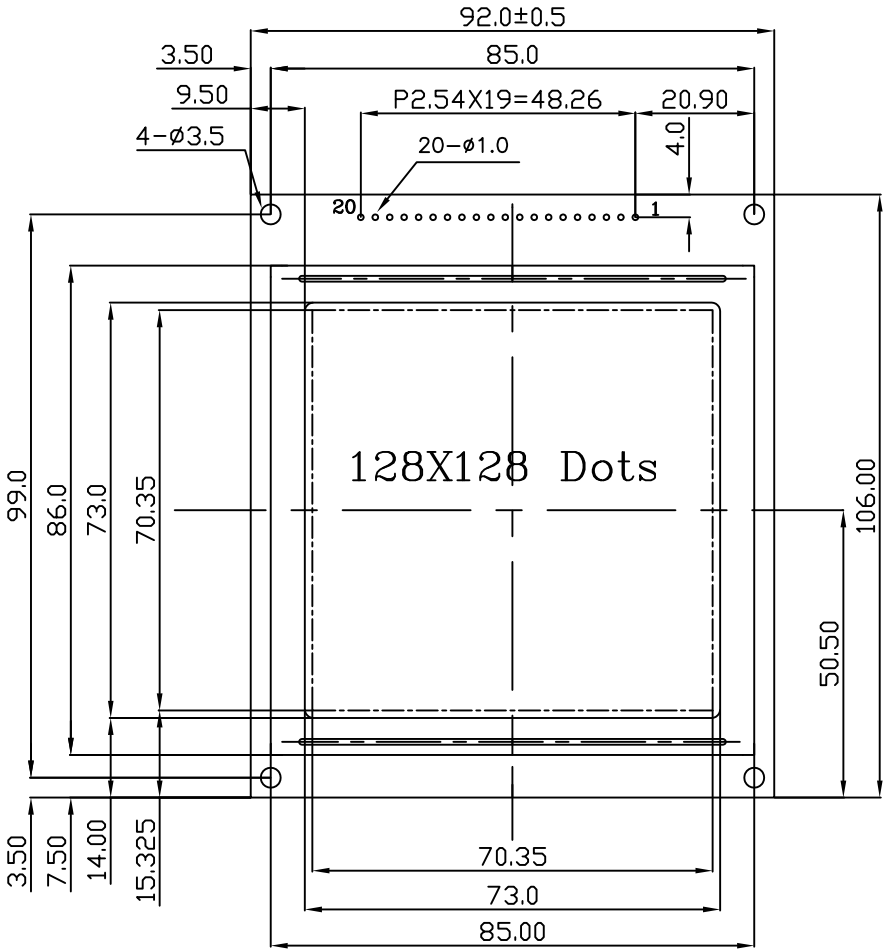

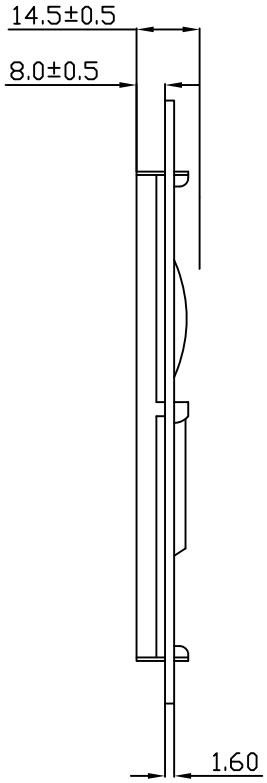

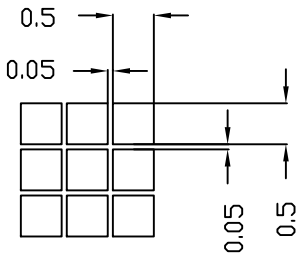

PIN NO.	1	2	3	4	5	6	7	8	9	10	11	12	13	14	15	16	17	18	19	20
SYMBOL	FG	VSS	VDD	VO	/WR	/RD	/CE	C/D	/RST	DB0	DB1	DB2	DB3	DB4	DB5	DB6	DB7	FS	LED+	LED−

NOTE:

1. MODE: STN TRANSFLECTIVE-POSITIVE-Y/G
2. 1/128 DUTY, 1/12 BIAS; VOP=16.0V
3. OP. TEMP.: 0~50°C
4. ST. TEMP.: −20~70°C
5. VIEWING DIR.: 6:00
6. WITH CONTROLLER IC SAP1024, 8K RAM
7. BACKLIGHT: LED, COLOR:YELLOW-GREEN
8. DIMENSION UNIT: mm, TOLERANCE UNLESS SPECIFIED:±0.3

SHIJIAZHUANG CHUANGDI TECHNOLOGY CO.,LTD		UNMARKED TOLERANCE:
CUSTOMER'S CODE:		
MODEL NO.: CSM-128128C	REV:	Page: